105 BG series

Ø105X25mm

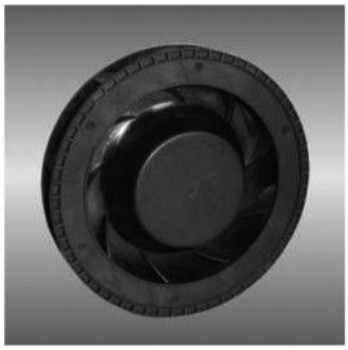

●General Specification / 一般規格

- ●Motor / DC single-phase brushless motor
- ●Material / Frame : die cast aluminum
  Impeller : plastic(94V-0)
- ● Bearing / Two ball precision bearing
- ●Weight / 0.13kg

- ● 馬達 / 直流單向無刷馬達
- ● 材質 / 框 : 塑膠 (94V-0) ;
  葉 : 塑膠 (94V-0)
- ● 軸承 / 雙滾珠精密軸承
- ● 重量 / 0.13kg

●Specification / 詳細規格

Model	Bearing System	Rated Voltage	Rated Current	Rated Speed	Maximum Air Flow		Maximum Static Pressure		Sound Level	P-Q Curve
Part No.	B / S / F	V	A	RPM	m³/hr	CFM	Pa	In-H_2O	dBA	No.
BGN10525B12H	B	12	0.5	4300	71	42	222	0.89	53	①
BGN10525B12U	B	12	1.1	5300	93	55	371	1.49	58	②

● Drawing

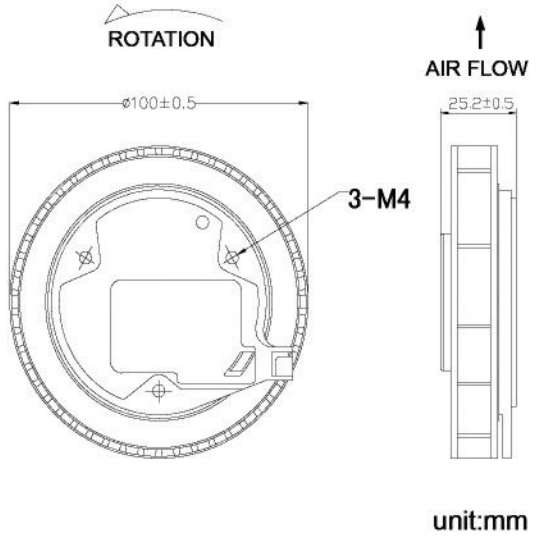
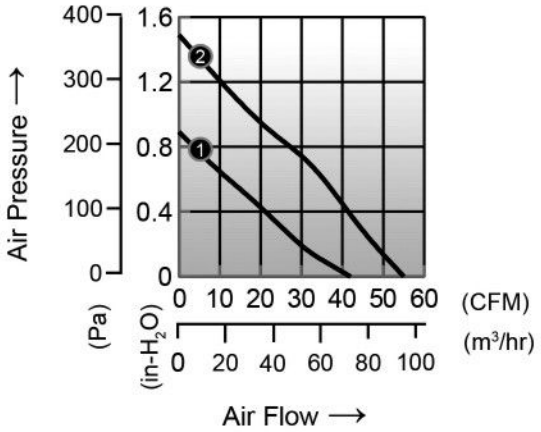
● Characteristic Curves